"Techno-Economic Modelling In Telecommunications

Economics of fixed broadband access network strategies

Thomas Monath, Nils K. Elnegaard, Pascal Cadro, **Dimitris Katsianis** and Dimitris Varoutas

Department of Informatics and Telecommunications,

University of Athens, Greece

Course Title "Techno-Economics of Mobile Networks and the Internet"

Center for Communication, Media and Information Technologies (CMI) of Alborg University Copenhagen

Example: Central Exchange (CEx) segmentation

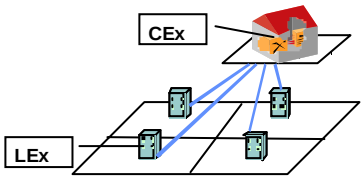

Dense urban:	4 x 16,384	potential subscribers
Urban:	4 x 16,384	potential subscribers
Suburban:	8 x 8,192	potential subscribers

Area Structure

Area	Average cable length Customer LEx (m)	subscribers per km ^{2}	Number of buildings	Subscriber per building
Dense Urban	1,400	5,461	1,024	64
Urban	2,200	2,048	2,048	32
Sub - Urban	3,400	410	16,384	4

Market Potential	Dense Urban	Urban	Suburban
Customer units total	16,384	16,384	8,192
Households / Access Area	14,746	15,237	7,700
Business / Access Area	1,638	1,147	492
Percentage Business	10%	7%	6%

Distribution Structure and Geographic Model of the Dense Urban Area

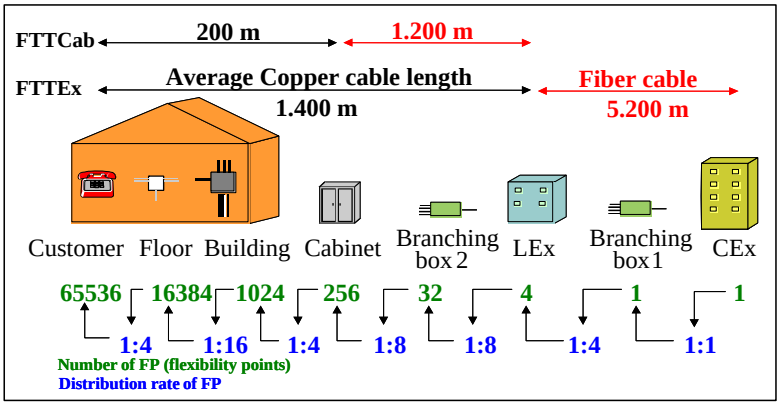

Definition of Service Classes and traffic assumptions

Service Classes	Maximum Downstream [kbps]	Maximum Upstream [kbps]	Examples of Interface Type	Traffic Concentration (start value)	Mean Source Traffic [kbps]
Silver-Residential	6,144	640	10BaseT	0,05	0,307
Gold- Residential	23,168	4,096	10/100BaseT	0,05	1,158
Basic-Business	6,400	6,400	10/100baseT 3xE1	0,2	1,28
Silver-Business	8,576	8,576	10/100baseT 4xE1	0,2	1,715
Gold-Business	23,168	23,168	10/100baseT E3/ATM25.6	0,2	4,634

Application of Broadband forecast Model for the Urban Service Access Area

Penetration Evolution – Urban Service Access Areas

Assumed incumbent operators market share of residential and business market

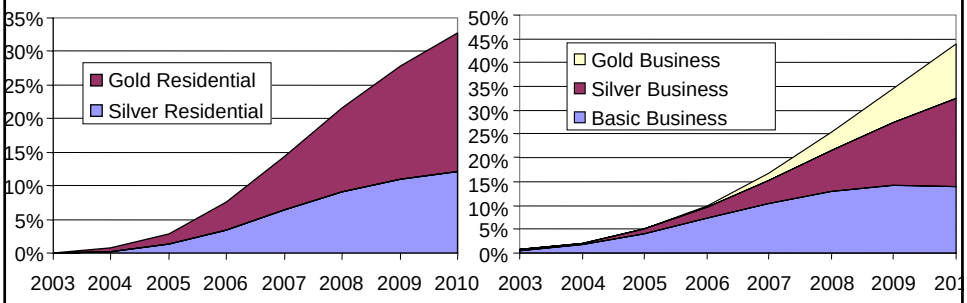

Tariffs for residential and business customers

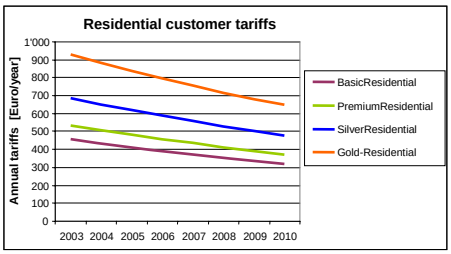

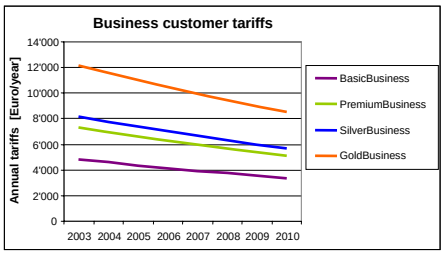

Example: Model of Gigabit Ethernet Local Exchange switch architecture

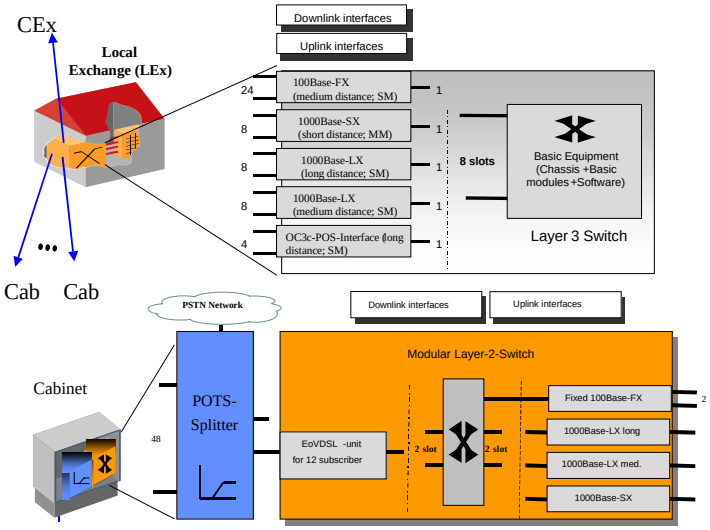

Generic Comparison Architectures

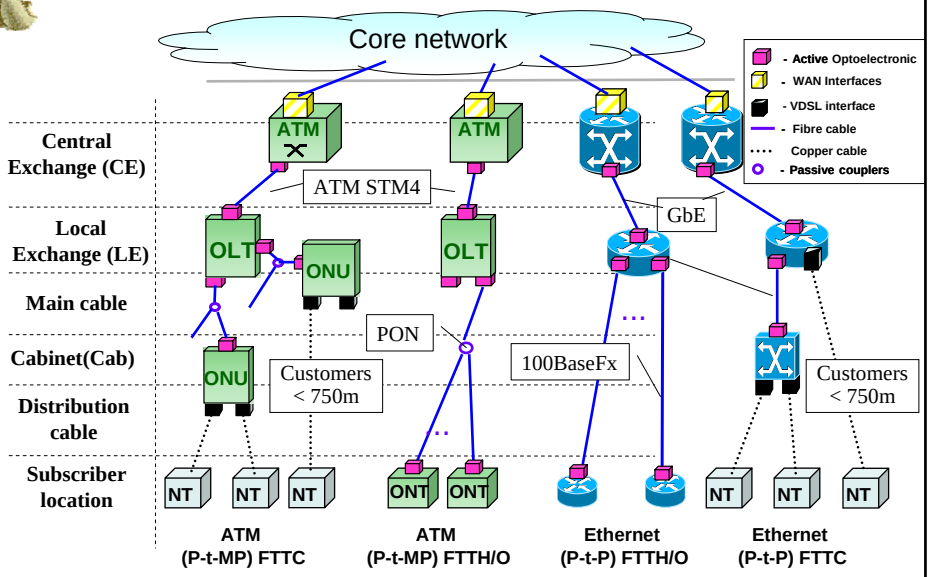

Major economic results

	Net Present Value (NPV)			
	Fibre to the Cabinet		**Fiber to the Home/Office**	
Area	ATM	Ethernet	ATM	Ethernet
Dense Urban	29,45 mill €	29,40 mill €	18,31 mill €	7,47 mill €
Urban	18,13 mill €	18,06 mill €	-9,11 mill €	-22,30 mill €
Suburban	-34,42 mill €	-38,21 mill €	-279,49 mill €	-295,32 mill €
	Internal Rate of Return (IRR)			
	FTTC		**FTTH/O**	
Area	ATM	Ethernet	ATM	Ethernet
Dense Urban	66,8 %	56,2 %	46,1 %	21,5 %
Urban	30,8 %	29,7 %	no return	no return
Suburban	no return	no return	no return	no return
	Pay back Period [years]			
	FTTC		**FTTH/O**	
Area	ATM	Ethernet	ATM	Ethernet
Dense Urban	3,8	4,3	5,5	7,5
Urban	5,3	5,7	no return	no return
Suburban	no return	no return	no return	no return

Investment breakdown for FTTC deployment by area and technology

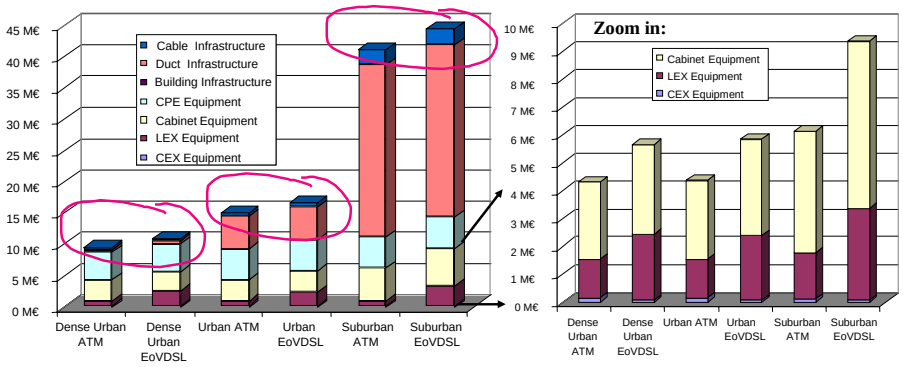

Risk profiles by probability of NPV < 0

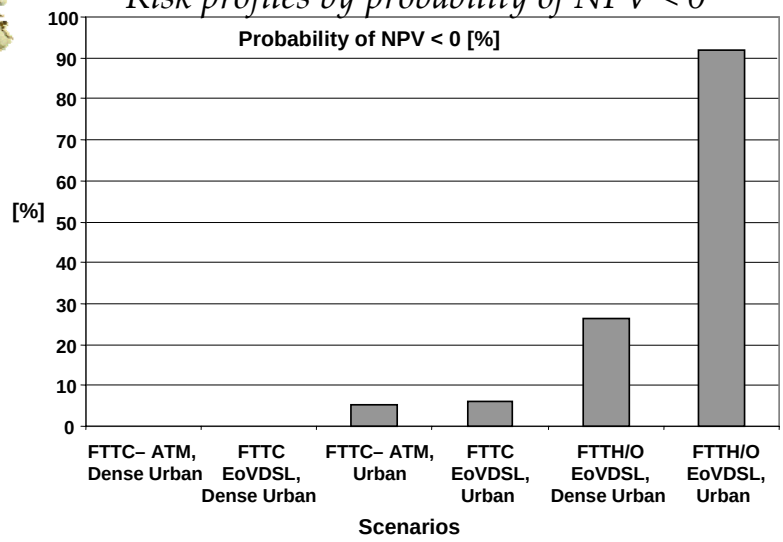

Time for Questions & Answers

dkats@di.uoa.gr